(1) x1

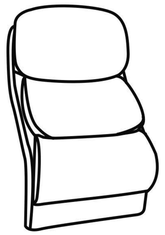

(2) x1

(3) x1(L)X1(R)

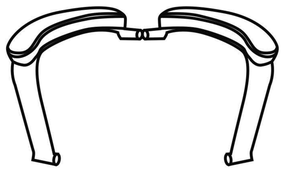

(4)X1

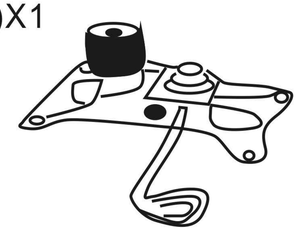

(5)X1

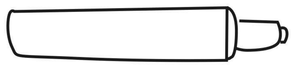

(6)X1

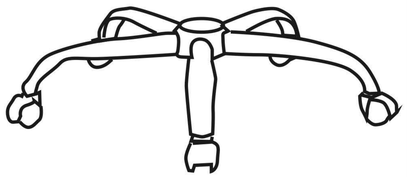

(7)X5

(8)X4

(9)X4

(10)X4

(11)X4

(12)X1

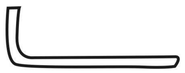

1

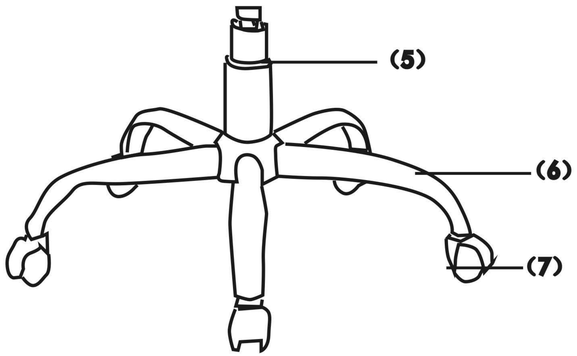

2

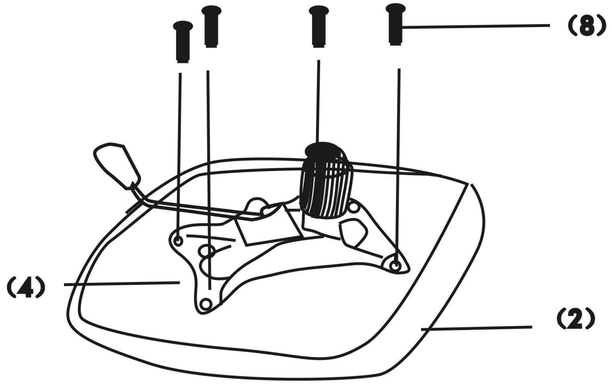

3

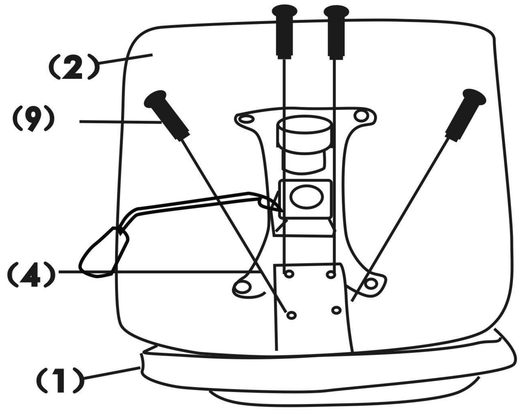

4

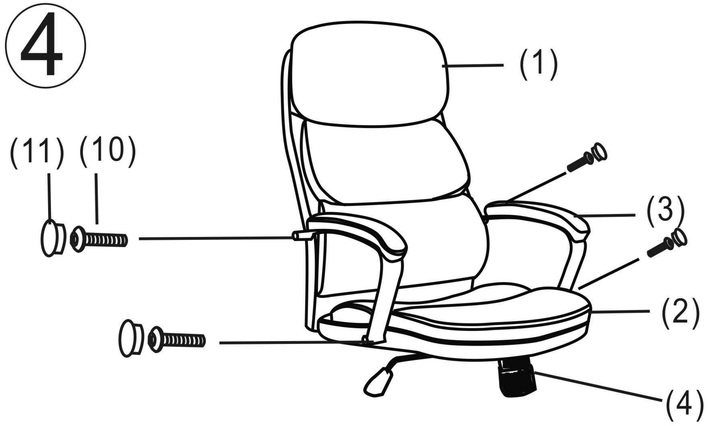

5

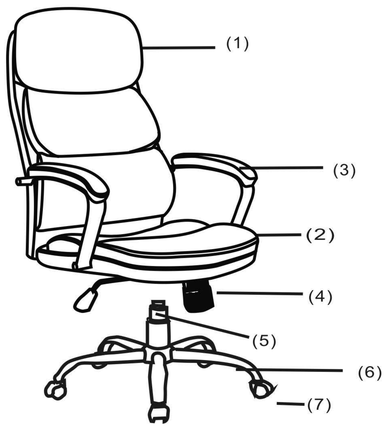

6

HC.313 GUBI